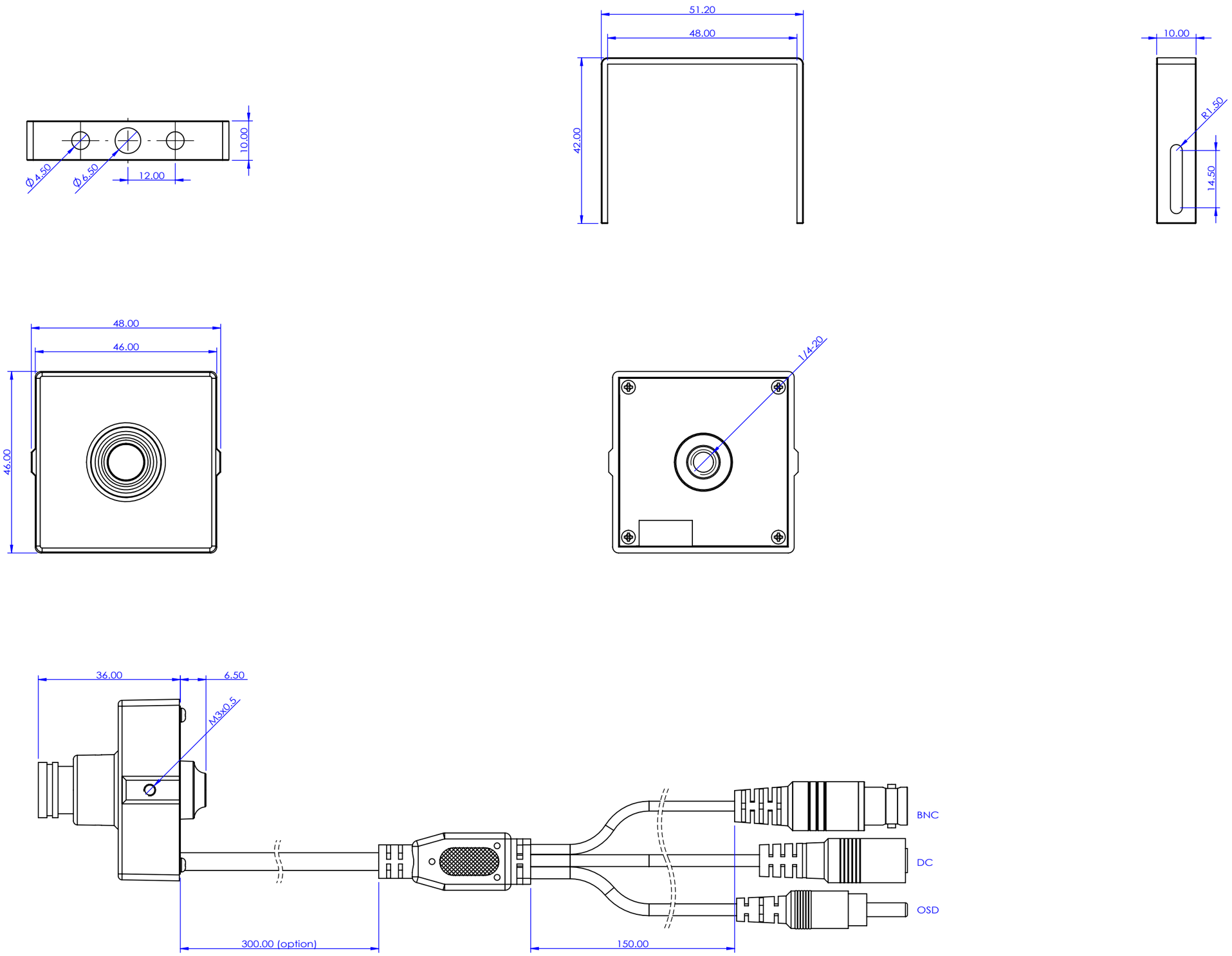
Ø4.50
Ø6.50
12.00
10.00
51.20
48.00
42.00
10.00
R1.50
14.50
48.00
46.00
46.00
1/4-20
36.00
6.50
M3x0.5
BNC
DC
OSD
300.00 (option)
150.00